Hula-Hoop Antennas:

When antenna height is reduced by loading, efficiency deteriorates rapidly. Here is a system of antenna height-reduction where circumferentia aperture is substituted for antenna portions lost

TODAY, when the military needs reliable world-wide communications, long waves have again assumed great importance. This trend has revived interest in the electrically short antenna.

While important for long-wavelength applications, the short-height antenna is also valuable in mobile and portable communications systems in the high-frequency bands where the vertical extent of a resonant quarter-wave antenna is mechanically impractical.

SHORT ANTENNA—A naturally resonant, vertical antenna such as the grounded quarterwave radiator is a colinear aperture. Its properties are ideal for general communications, providing an omnidirectional radiation pattern with most signals delivered at low angles. At full height, its radiation resistance is far greater than any electrical-loss resistance in the conductors. Even when operated over soil, the vertical's characteristics permit excellent radiation efficiency, even with simple wire radial ground networks.

When the height of this classical antenna is sharply reduced and electrical resonance restored by a conjugate reactor, its performance deteriorates severely. Fortunately, excellent theoretical contributions[1] on reduced electrical size antennas and modern supergain theory[2] show the reason for this effect. Reduction of physical height removes a portion of the colinear aperture of the vertical antenna. Loss of colinear aperture means loss of radiation resistance, resulting in less input power coupled to space. Loss in wire ground planes is severe in low-frequency radiator use.

When dealing purely with a colinear aperture, loss of electrical height means less efficiency.

DDRR ANTENNA—In the directional-discontinuity ring-radiator (DDRR) antenna,[3] circumferential aperture is substituted for the colinear portion lost in height reduction. Using normalized dimensions and, assuming that an antenna is desired whose height is 2.5 electrical degrees at the operating wavelength, it is specified that no lumped inductive elements be used to achieve electrical resonance to reduce electrical loss. Radiation efficiency must be within 2 to 3 decibels of a full quarter-wave vertical antenna erected over the same ground plane.

A circular array with a circumference of one full electrical quarter wavelength results in an antenna diameter of 28 electrical degrees. To attain an in-phase electric distribution over this circumferential aperture means using a center-fed radial waveguide like the flat top antenna. Study of a 28-degree diameter electric array by techniques such as those developed by Chireix,[4] shows that even with a 90-degree shift in phase around the aperture, an omnidirectional radiation pattern in the horizon plane will result. To establish a circular array a conductor one-quarter wavelength in length is conductively joined to the

HOOP WITH A PURPOSE

Low-frequency antennas require either long wires supported by tall masts, or vertical tower radiators 60 to 300 feet. Here is an antenna that looks like a child's hula-hoop and has performance characteristics closely approaching those of a full quarter-wave vertical.

The DDRR antenna (this week's cover) offers a height reduction of up to thirty-to-one over verticals now in use and can range in size from 6-inches to 5,000 feet in diameter and 2-inches to 300 feet in vertical height.

A model of this new antenna only 2-feet high, recently equaled the performance of a 60-foot vertical radiator

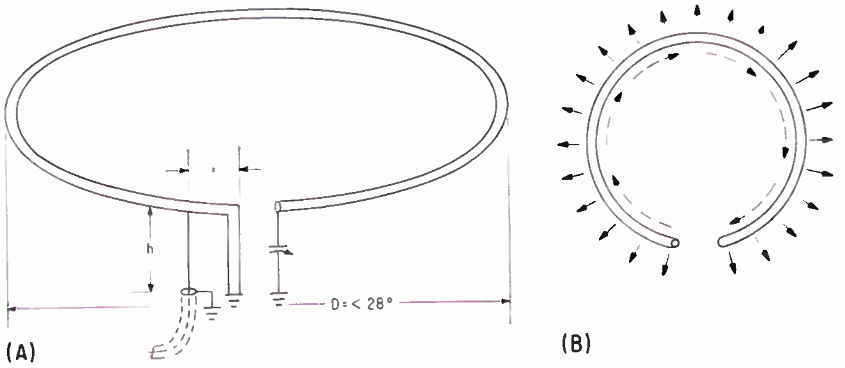

RING TRANSMISSION LINE *showing feed and tuning, if required (A) and current in ring element (B)—Fig. 1*

A Coming Trend?

By J. M. BOYER
Chief, Radio Physics Group,
Northrop Ventura, Van Nuys, Calif.

top of a 2.5-degree high vertical element and bent around in the horizon plane at this height to form a circle as shown in Fig. 1A. If a generator is connected across the slot formed by the circular conductor and the ground plane, an energy wave can be launched in this curved boundary region.

When a change of direction occurs in any electromagnetic waveguide system, higher order modes are established.[5] If this discontinuity takes place in a completely closed system such as rectangular waveguide, the equivalent circuit of the discontinuity will contain only reactive components because no power is lost in radiation. If, however, the fields are not confined, but extend beyond the guide boundaries, the discontinuity equivalent circuit contains resistive and reactive components. Field line fringing or extension effect is present in dielectric waveguides and open-wire transmission lines.

The constant-height ring-conductor just described forms a single-wire transmission line with the ground-plane surface. It runs a straight path rather than in a curve, this close-spaced line produces little radiation as shown by King.[6] This condition is true, to a first order, because the TEM mode exists over the length of this line, with discontinuities occurring only at the ends.

If the same single wire line is bent into a curve, however, a wave launched at its input terminals encounters a different set of conditions. The bent waveguide is a constant series of directional discontinuities. Thus, the launched wave radiates continuously in a direction transverse to the line-axis throughout its entire length. Radiation occurs from two sources; a horizontally polarized wave is launched from the current-flow in the ring element itself, but is cancelled because of the antisymmetric current relation in the image plane. At the same time, vertically polarized radiation takes place from the higher-order modes established by the direction discontinuity. The launched wave radiates as it moves around the ring until it meets the far end. The energy still remaining at this point reflects, radiating on its path back to the generator. Thus, the DDRR antenna might well be called a leaky-waveguide radiator, with radiation being integrated over its entire circumferential boundary or aperture.

The DDRR antenna produces typical dipole doughnut radiation pattern when its diameter is not large in wavelength. Chireix analysis quickly explains the omnidirectional azimuth plane pattern. In the elevation plane, the zenith null must occur due to the out-of-phase relationship of parallel current components on the ring element and the typical antisymmetric distribution of electric lines of force around

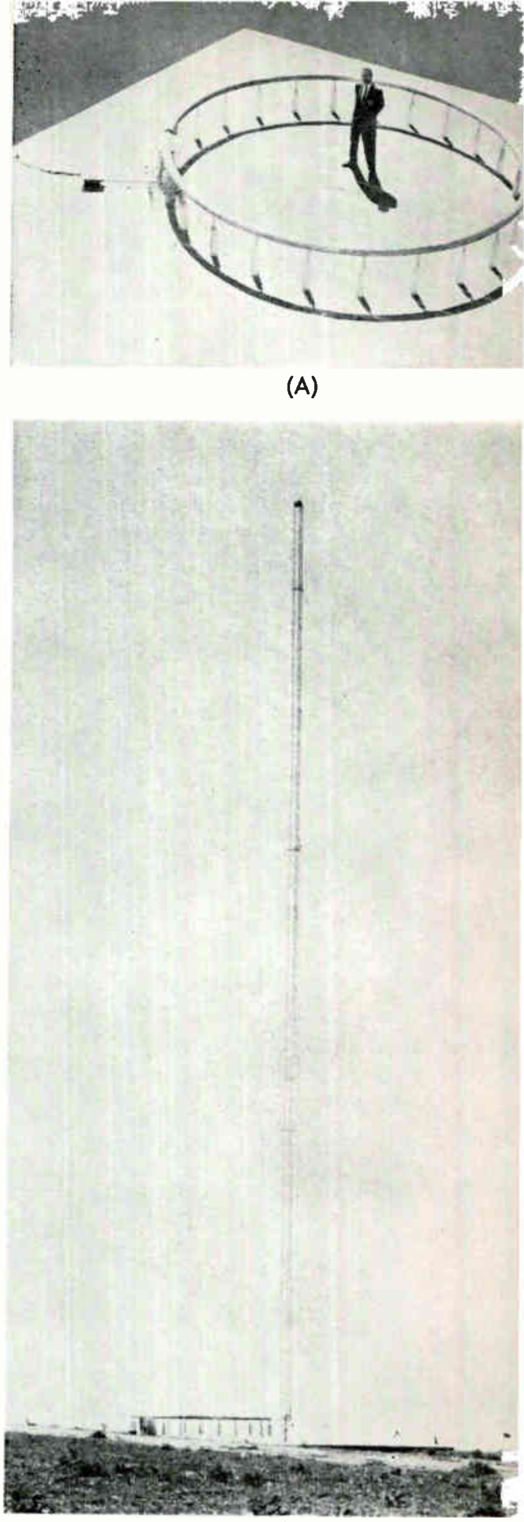

MODEL of the DDRR antenna operating between 2 and 4 Mc (A) and the same antenna compared to a quarter-wave vertical (B)—Fig. 3

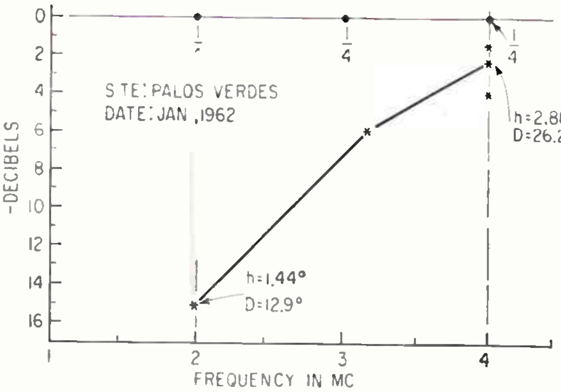

AVERAGE GAIN *versus frequency of a DDRR antenna compared to a full, quarter-wave vertical radiator with same counterpoise—Fig. 2* the circular aperture as shown in Fig. 1B.

Although the ring-type-DDRR antenna design simplifies low-height radiator structure by eliminating the large current sheet found in the flat top model, it has other advantages. Unlike the flat top, the DDRR design is naturally resonant when the diameter of the aperture is approximately 28 electrical degrees. Resonance is relatively unaffected by the height *h* above the ground plane if kept well below 90 degrees. When size limitations restrict the diameter to less than 28 degrees, electrical resonance can be restored with a low-loss air or vacuum capacitor connected from the open end of the ring to the ground plane.

The DDRR design permits direct connection of transmission lines across the aperture and ground plane. Any line from 36 to 500 ohms may be used if dimension *X* is varied to suit its characteristic impedance. Thus, the impedance-matching network required with other short height designs is eliminated, together with attendant electrical loss and additional restriction of bandwidth. When point *X* has been determined to conform with the transmission line, a DDRR antenna may be capacitively tuned over at least a 2:1 frequency range without input vswr exceeding the 2:1 limit.

PERFORMANCE—No single antenna design is a panacea for the problems of communications, but the performance and flexibility of the DDRR antenna, represents a significant improvement.

Figure 2 shows typical gain variation of a simple DDRR antenna over a 2:1 frequency band. The magnitudes are the average for many field-strength comparisons to full quarter-wave vertical antennas taken at steadily increasing range over a combination land and sea path, where distances ranged from 1 to 132 miles in both a North and South path. The model used was small electrically, being only 12.9 degrees in diameter and 1.44 degrees high at the 2-Mc limit and 26.28 degrees in diameter and 2.88 degrees high at 4 Mc. This antenna appears in Fig. 3A. At the same frequency limits, the comparison test antenna was a one-foot, triangular cross-section tower, 110 feet tall, at 2 Mc and 68 feet high at 4 Mc. as shown in Fig. 3B. Operation was over rocky soil, using 90 radials each one-half wave long. Tests were made under the special call KM2XOP by authority of the FCC. Tuning of the test antenna over the entire frequency range was completely remote, using a servo actuated Jennings vacuum variable capacitor adjusted from the transmitter console 500 feet away; vswr was under 2:1 in 50-ohm coaxial cable at all frequencies.

MOBILE USE—At higher frequencies, the DDRR has proven a convenient and efficient device for mobile communications. A mobile model designed for use between 26.5 and 31 Mc is 27 inches in diameter and projects only 3½ inches above the vehicle roof. The horizontal radiation pattern of the DDRR and that of a full quarter-wave whip antenna on the same vehicle are shown in Fig. 4. Departure from a perfect omnidirectional pattern for both antennas is due to the nonsymmetrical ground plane geometry provided by the metal skin of the car. In addition to increased efficiency, the antenna possesses other important advantages for the mobile service. At high road speeds, there is no signal-flutter effect from the DDRR antenna. This wind effect is severe in vertical antennas cut for the same frequency range. Also, the simple DDRR design used in the mobile service acts as a sharp band-pass filter centered on the operating channel. Thus, better isolation from adjacent-channel interference is achieved during reception than with conventional designs. Being directly grounded to the car frame, an automatic static drain to ground is provided for static charge induced by fog, dust and precipitation, affording improved receiver signal-to-noise ratio.

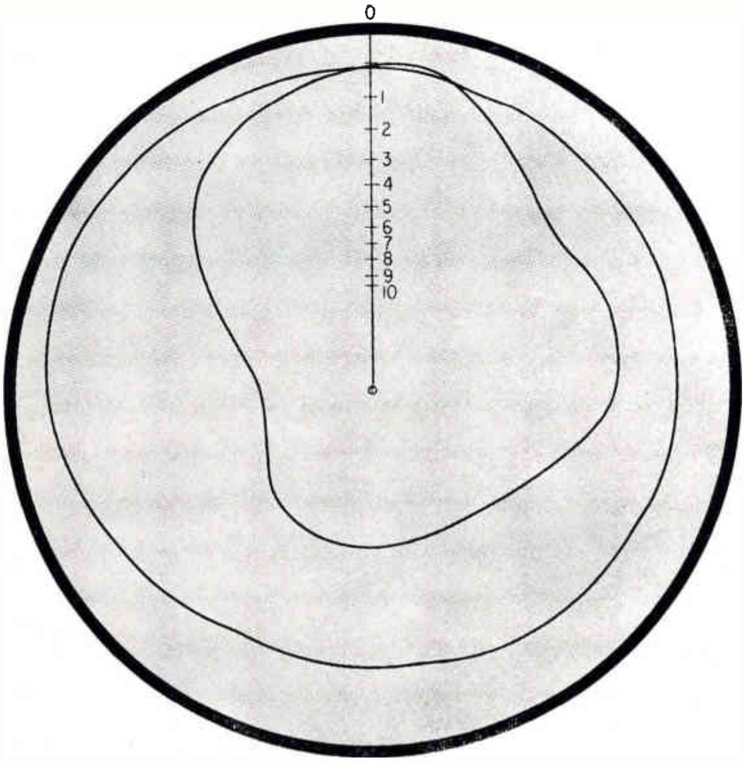

POLAR PLOT *of a vehicular quarter-wave whip (inner) and that of a DDRR antenna (outer)—Fig. 4*

REFERENCES

(1) L. J. Chu, Physical Limitations of an Omnidirectional Antenna. *J. App. Phys.* Dec. 1944.

(2) S. A. Schelkunoff, Advanced Antenna Theory. John Wiley & Sons, p 44-48.

(3) J. M. Boyer, Radio Antenna, U.S. Patent.

(4) H. Chireix, Antennas a Rayonnement Zenithal Reduit. *L'Onde Elec.* Vol. 15, p 440-446, 1936.

(5) T. Moreno, Microwave Transmission Design Data, Dover Pub. Co., p 162.

(6) R. P. King and J. E. Storer, Radiation Resistance of a Two-Wire Line. *Proc IRE*, p 1408-1412, Nov. 1951.

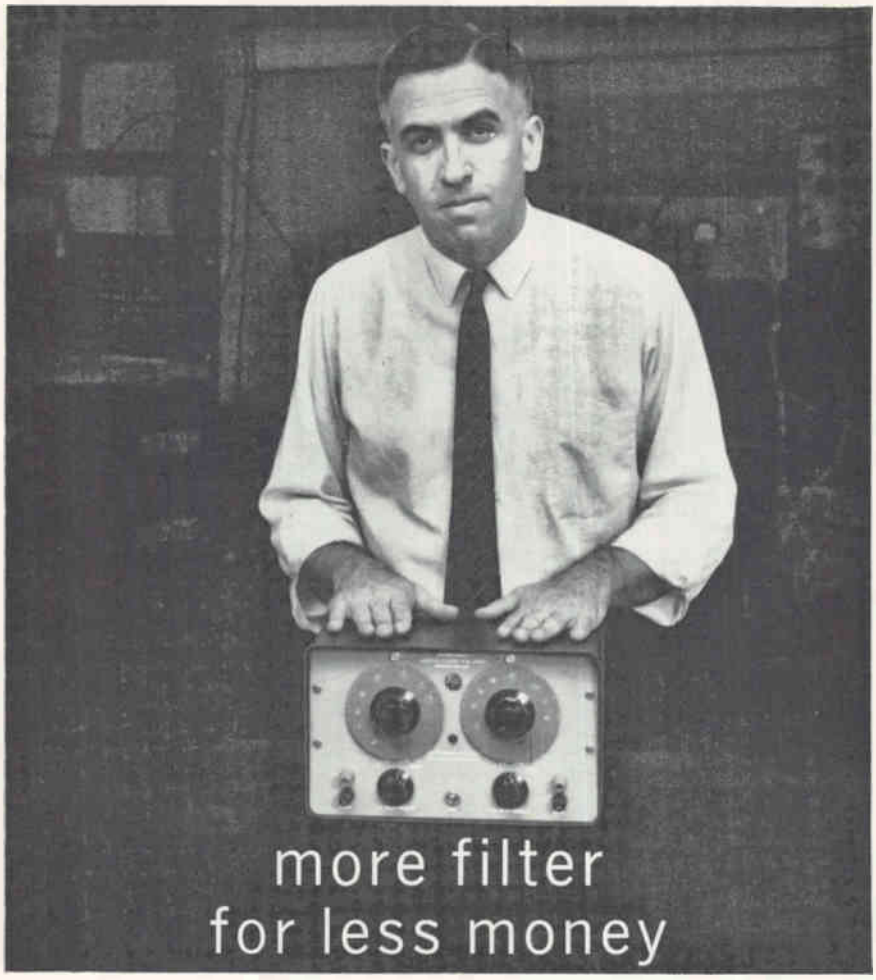

the Model 310-AB!

Look at all the features Krohn-Hite packs into one low-cost filter! Krohn-Hite's Model 310-AB variable band-pass filter covers the range from 20 cps to 200 kc. It features continuous independent adjustment of the high and low cut-off frequencies, so that the center frequency and band width are both adjustable.

Slope is 24 db per octave. Dials are direct-reading for quick and accurate measurement. Cut-off frequency accuracy is ±10%, with ±5% available.

A big advantage of the Model 310-AB is its high input impedance. It can be bridged across sensitive circuits without disturbing them. Its low output impedance is another advantage, and the output doesn't require terminating in a specific load.

Low noise is another feature of the 310-AB. Its hum and noise spec is that of other much more expensive filters (less than 0.25 millivolt rms), allowing the filter to work at low signal levels.

How does Krohn-Hite put so many features into a $350 filter? Easy — Krohn-Hite are filter *specialists* — the first to introduce many filtering techniques now in widespread use. So, for the most for the money, ask for a demonstration of the 310-AB. Check it out, and then check the price tag! Write for full specifications.

KH

KROHN-HITE CORPORATION
580 Massachusetts Avenue • Cambridge 39, Mass.
Pioneering in Quality Electronic Instruments


PROGRAMMER'S *console for the Daystrom system*

grammed for a full day's studio operation.

According to TRW, a novel feature of its installation will be studio lighting preset storage and retrieval. CBS has been using a TRW computer for control of KNXT, Los Angeles, since Dec. 31, 1960.

Portable Generator Will Power Tv Sets

TOKYO—Sony and Honda Motor Co. are jointly developing a portable generator driven by a gasoline engine to supply power to Sony's micro-tv sets. Sony says it expects big demand both here and abroad because at present battery capacity severely limits portable use of its set. Prototype uses four-cycle, 15-cc engine to drive a 40-w generator. It runs five hours on one-half liter of gasoline.

NAVY BUYS DDRR

Navy will install one of Northrop Ventura's DDRR antennas (ELECTRONICS, p. 44, Jan. 11) on a Pacific Missile Range instrumentation ship now under construction, according to Northrop. The ship is designed to recover manned spacecraft.

The antenna array will consist of five concentric circular elements, 3 to 35 feet in diameter and 5 feet high. It will operate at 2 to 30 Mc. Efficiency will be close to that of a 120-foot-high tower antenna, the company says